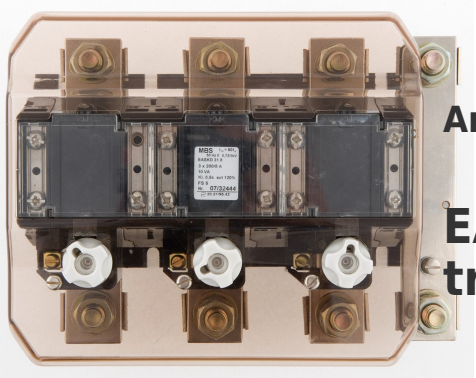

Art-Nr.: 47550

EASKD 31.8 - Billing current transformer 15 5 0,2 3x600

Sizes:

Technical Data:

apparent power (VA):	15
secondary current:	5
Type number:	31.8
accuracy class:	0,2
primary current:	3x600
Type-Name:	EASKD

General technical Data:

apparent power (VA):	15
secondary current:	5
Type number:	31.8
accuracy class:	0,2
primary current:	3x600
Type-Name:	EASKD

Technical images:

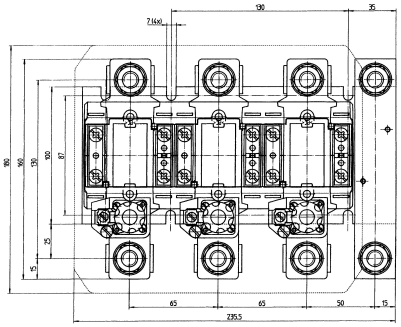

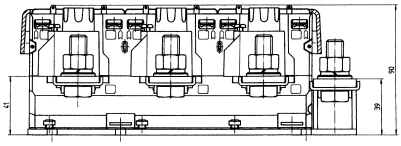

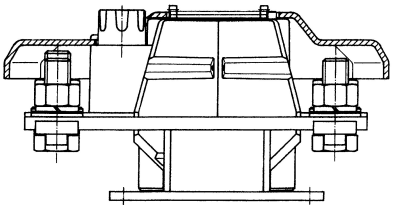

Contact

Dahms GmbH Max-Keith-Straße 66 45136 Essen Telefon: 0201 - 890885-0 E-Mail: dahms@dahms-gmbh.de