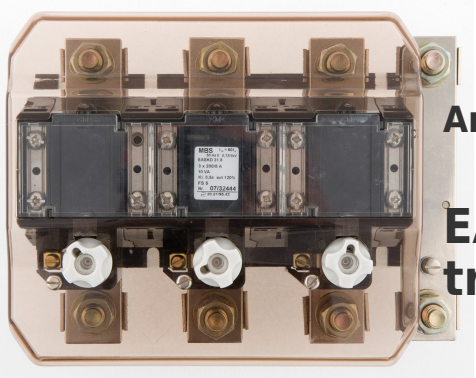

## Art-Nr.: 47619

# EASKD 31.8 - Billing current transformer 3x200 10 5 0,5s

### Sizes:

### Technical Data:

| | |
|---|---|
| primary current: | 3x200 |
| apparent power (VA): | 10 |
| secondary current: | 5 |
| Type number: | 31.8 |
| accuracy class: | 0,5s |
| Type-Name: | EASKD |

### General technical Data:

| | |
|---|---|
| primary current: | 3x200 |
| apparent power (VA): | 10 |
| secondary current: | 5 |
| Type number: | 31.8 |
| accuracy class: | 0,5s |
| Type-Name: | EASKD |

### Technical images:

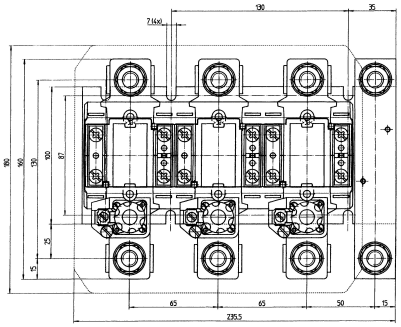

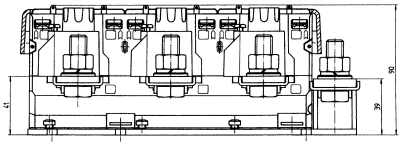

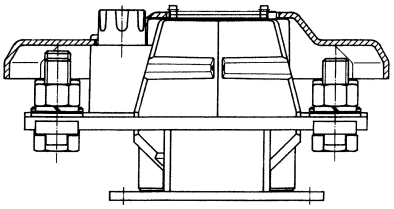

### Contact

Dahms GmbH Max-Keith-Straße 66 45136 Essen Telefon: 0201 - 890885-0 E-Mail: dahms@dahms-gmbh.de