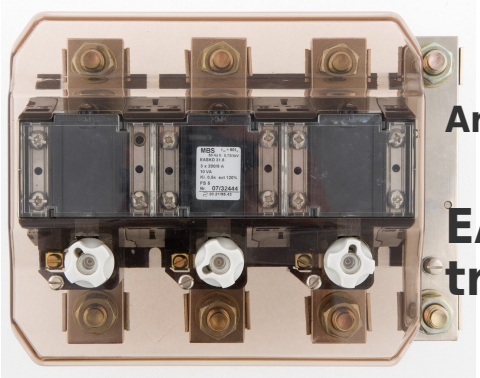

Art-Nr.: 46741

EASKD 31.8 - Billing current transformer 3x400 10 0,2

Sizes:

Technical Data:

primary current:	3x400
apparent power (VA):	10
Type number:	31.8
accuracy class:	0,2
secondary current:	1
Type-Name:	EASKD

General technical Data:

primary current:	3x400
apparent power (VA):	10
Type number:	31.8
accuracy class:	0,2
secondary current:	1
Type-Name:	EASKD

Technical images:

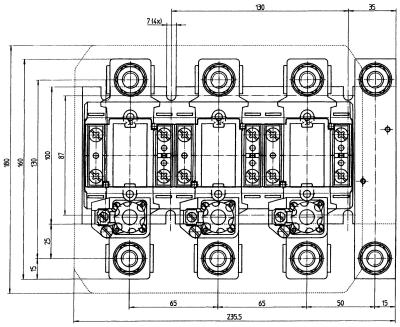

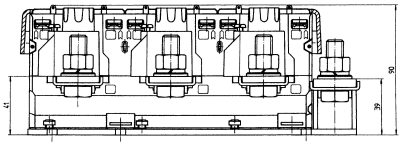

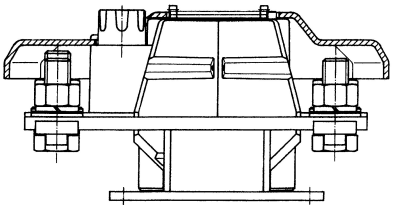

Contact

Dahms GmbH Max-Keith-Straße 66 45136 Essen Telefon: 0201 - 890885-0 E-Mail: dahms@dahms-gmbh.de