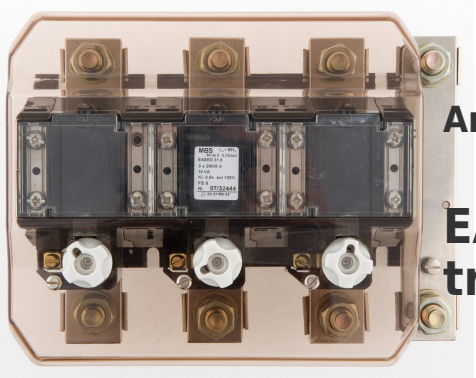

**Art-Nr.: 47779**

# EASKD 31.8 - Billing current transformer 3x200 0,5 10

## Sizes:

## Technical Data:

| | |
|---|---|
| primary current: | 3x200 |
| accuracy class: | 0,5 |
| apparent power (VA): | 10 |
| Type number: | 31.8 |
| secondary current: | 1 |
| Type-Name: | EASKD |

## General technical Data:

| | |
|---|---|
| primary current: | 3x200 |
| accuracy class: | 0,5 |
| apparent power (VA): | 10 |
| Type number: | 31.8 |
| secondary current: | 1 |
| Type-Name: | EASKD |

## Technical images:

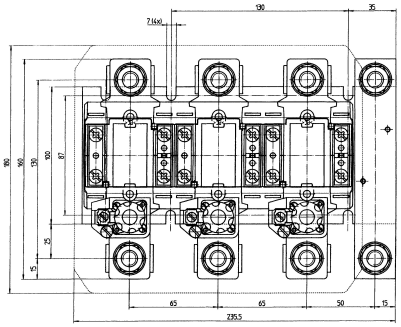

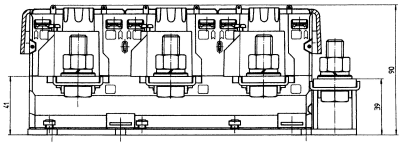

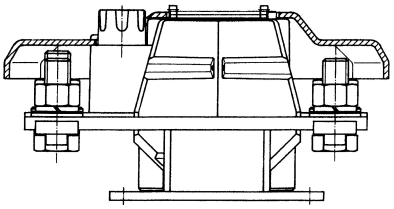

## Contact

Dahms GmbH Max-Keith-Straße 66 45136 Essen Telefon: 0201 - 890885-0 E-Mail: dahms@dahms-gmbh.de