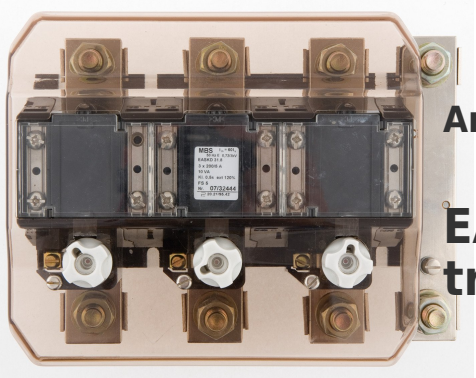

Art-Nr.: 47628

EASKD 31.8 - Billing current transformer 3x300 15 5 0,5s

Sizes:

Technical Data:

primary current:	3x300
apparent power (VA):	15
secondary current:	5
Type number:	31.8
accuracy class:	0,5s
Type-Name:	EASKD

General technical Data:

primary current:	3x300
apparent power (VA):	15
secondary current:	5
Type number:	31.8
accuracy class:	0,5s
Type-Name:	EASKD

Technical images:

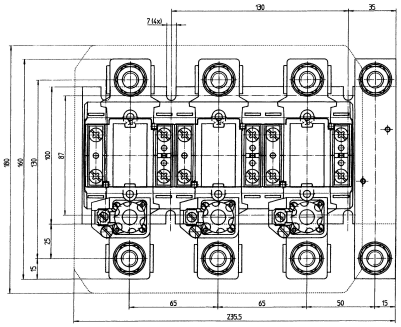

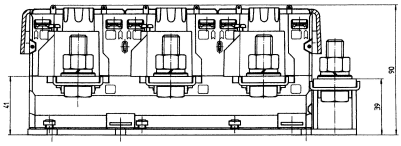

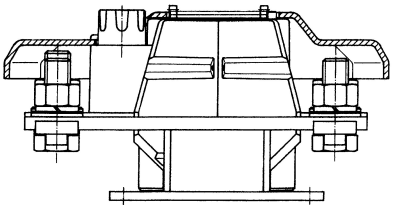

Contact

Dahms GmbH Max-Keith-Straße 66 45136 Essen Telefon: 0201 - 890885-0 E-Mail: dahms@dahms-gmbh.de