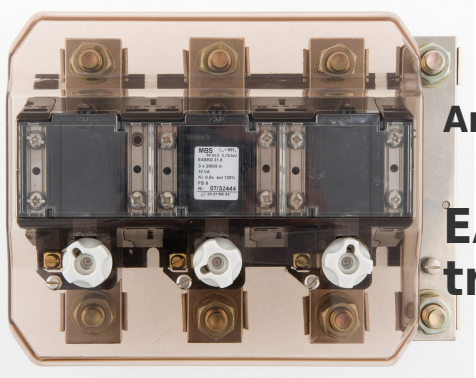

Art-Nr.: 46792

EASKD 31.8 - Billing current transformer 3x400 0,5 15

Sizes:

Technical Data:

primary current:	3x400
accuracy class:	0,5
apparent power (VA):	15
Type number:	31.8
secondary current:	1
Type-Name:	EASKD

General technical Data:

primary current:	3x400
accuracy class:	0,5
apparent power (VA):	15
Type number:	31.8
secondary current:	1
Type-Name:	EASKD

Technical images:

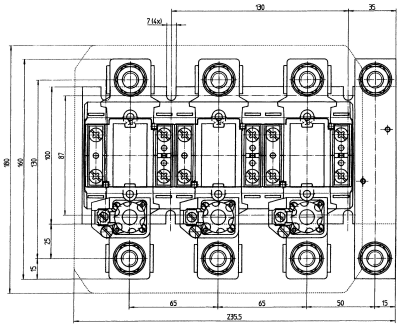

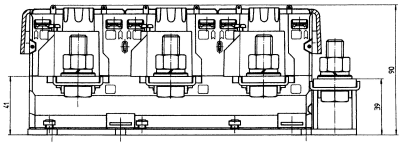

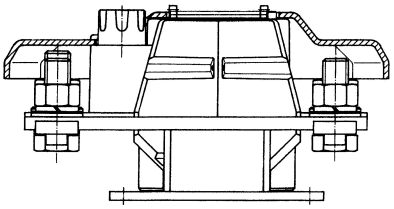

Contact

Dahms GmbH Max-Keith-Straße 66 45136 Essen Telefon: 0201 - 890885-0 E-Mail: dahms@dahms-gmbh.de