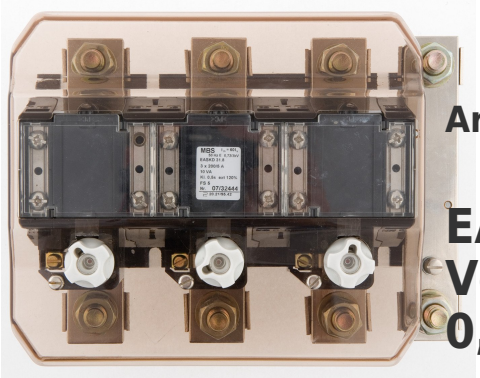

Art-Nr.: 47782

EASKD 31.8 - Verrechnungsstromwandler 3x250 0,5 5

Sizes:

Technical Data:

primary current:	3x250
accuracy class:	0,5
apparent power (VA):	5
Type number:	31.8
secondary current:	1
Type-Name:	EASKD

General technical Data:

primary current:	3x250
accuracy class:	0,5
apparent power (VA):	5
Type number:	31.8
secondary current:	1
Type-Name:	EASKD

Technical images:

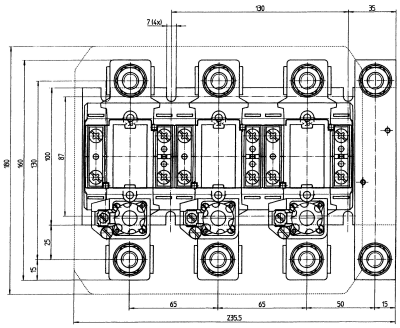

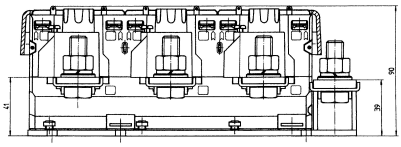

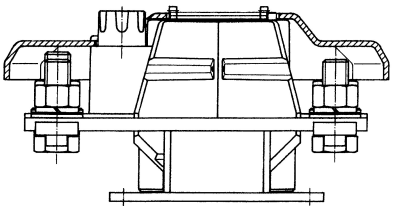

Contact

Dahms GmbH Max-Keith-Straße 66 45136 Essen Telefon: 0201 - 890885-0 E-Mail: dahms@dahms-gmbh.de